PCB Terminal Blocks, Fixed Horizontal Wire Entry

ASIWJ142R-5.08

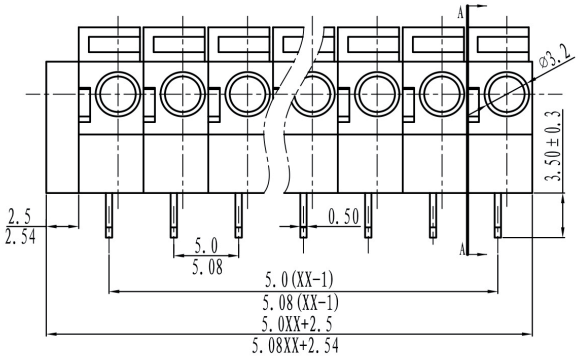

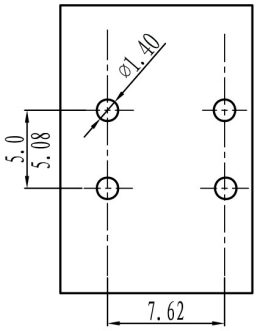

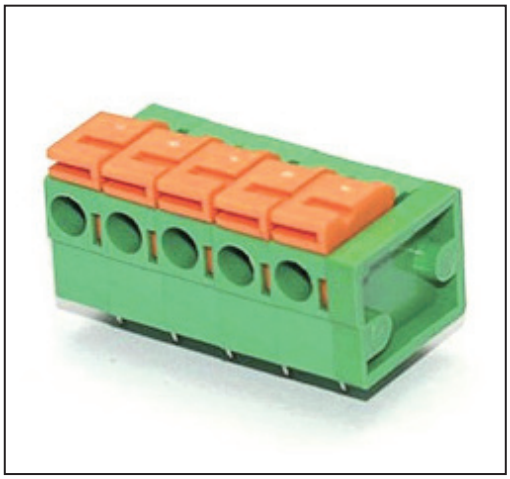

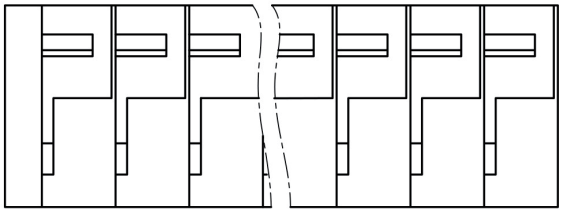

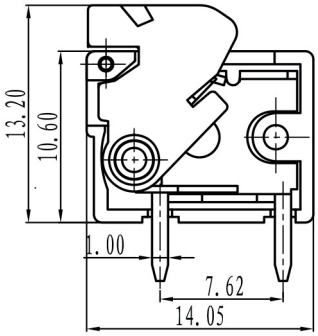

Certification	
	c UL us
Material	
Spring	Stainless Steel
Pin/Plate	Brass, Tin Plated
Housing	PA66, UL 94V-0, Green
Electrical	
Standard	UL 1059/CSA C22.2 No. 158
Rated Voltage	300 V
Rated Current	10 A
Wire Range	22-16 AWG
Contact Resistance	20mΩ
Insulation Resistance	500MΩ/500 Vdc
Widthstand Voltage	2000 Vac/1 Min
Mechanical	
Temperature Range	-40°C…+105°C
Strip Length	9-10 mm (0.35-0.39”)
Size	
Pitch	5.08 mm (.200”)
Poles	2P-16P. Additional sizes available on request.

Item	No. of Poles	Length (mm)
ASIWJ142R-5.08-2P	2	12.7
ASIWJ142R-5.08-3P	3	17.78
ASIWJ142R-5.08-4P	4	22.86
ASIWJ142R-5.08-5P	5	27.94
ASIWJ142R-5.08-6P	6	33.02
ASIWJ142R-5.08-7P	7	38.1
ASIWJ142R-5.08-8P	8	43.18
ASIWJ142R-5.08-9P	9	48.26
ASIWJ142R-5.08-10P	10	53.34
ASIWJ142R-5.08-11P	11	58.42
ASIWJ142R-5.08-12P	12	63.5
ASIWJ142R-5.08-13P	13	68.58
ASIWJ142R-5.08-14P	14	73.66
ASIWJ142R-5.08-15P	15	78.74
ASIWJ142R-5.08-16P	16	83.82